Bespoke & Stock Mesh Panels for Handrails, Balustrades & Fabrication

Revision #	Revision Date
# 0	18/01/2023

Lockinex®
great service, great quality

INTRODUCTION

Lockinex manufacture mesh infill panels to specific sizes to fit into either a new installation or an existing balustrade/Guardrail.

Angled, Corner and flat panels are all available to order.

Self colour & galvanised stock mesh panels also available

APPLICATION

Many guardrail installations will require the additional protection afforded by the installation of mesh infill panels.

Preventing the passage of young children, animals and indeed in some cases moving debris, mesh panels are a most economical and practical solution.

DESIGN

Designs can vary from application to application. Mesh panels can be deliberately used to control debris in waterways, landfill and amenity sites.

The size of the aperture/opening in the mesh is the most important dimension.
50mm square is the most common in guardrail applications as they meet the design criteria for loadings to the relevant British Standards & Euro Norms.

COMPOSITION, MANUFACTURE

The most common mesh panels have an aperture (the hole in the square mesh) of 50mm.
They are generally of a mild steel material, with a rod stiffening frame & galvanised after manufacture. Many other sizes of mesh, frame designs and material types are available - Please call to discuss.

Stock mesh panels (self colour and galvanised)

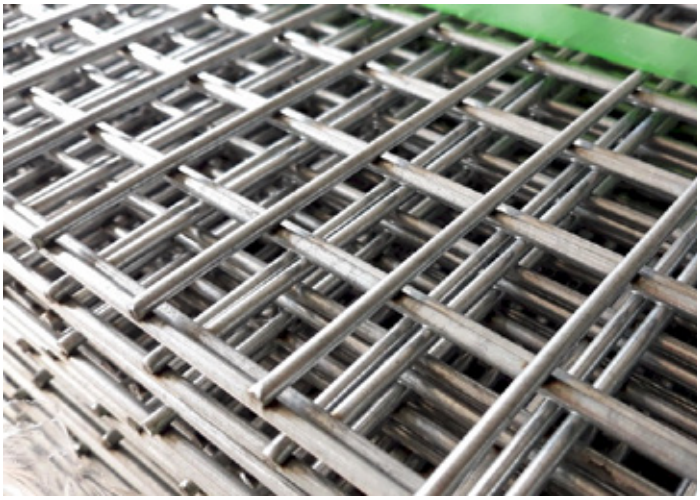

Finish	Mesh aperture	Sheet size	Product code
Self colour	25x25x3	1200x2400	MSH25-1
Self colour	25x25x3	1200x2400	MSH50-1
Galvanised	50x50x3	1200x2400	MSH25-2
Galvanised	50x50x3	1200x2400	MSH50-2

Handrail infill panels

We stock a range of hot dip galvanised mesh infill panels for use with our 48.3mm key clamp handrail system. All panels are designed to be used with upright post centres at 1495mm to achieve 0.36kN/m general duty loading with 1100mm approx. finish height.

Code	Guardrail infill panels from stock
MSH-1363X418	1363x418mm, 50x50x3mm mesh, 8mm rod frame, galvanised finish.
MSH-1363x836	1363x836mm, 50x50x3mm mesh, 8mm rod frame, galvanised finish.
MSH-1363x972	1363x972mm, 50x50x3mm mesh, 8mm rod frame, galvanised finish.


MSH-1363x418


MSH-1363x836


MSH-1363x972

MESH PANELS

The picture (left) shows the mesh welded onto the frame and is described as being on the 'near' side when viewed.

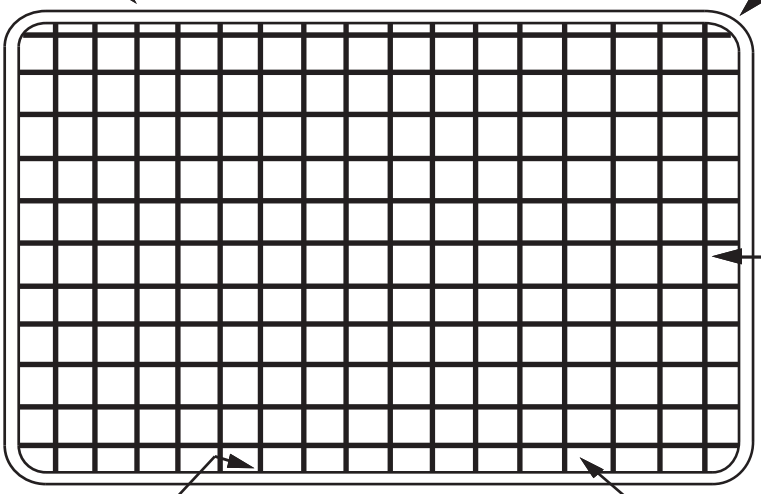

*On handed/angled and corner panels please clearly state if mesh is to be on the near side or far side of the solid rod frame. (Please refer to further information shown)

Please note- It is common practice for the rod frame to be on the side closest to pedestrians.

Other types of edging frame are also available for different applications. A few options are shown below. Please call to discuss.

Flat bar frame

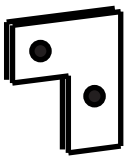

Angle frame

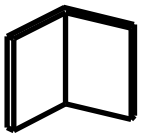

Box section frame

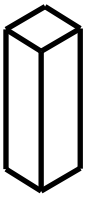

Example 1

Example using size 8 (48.3mm dia tube) inside edge dimensions

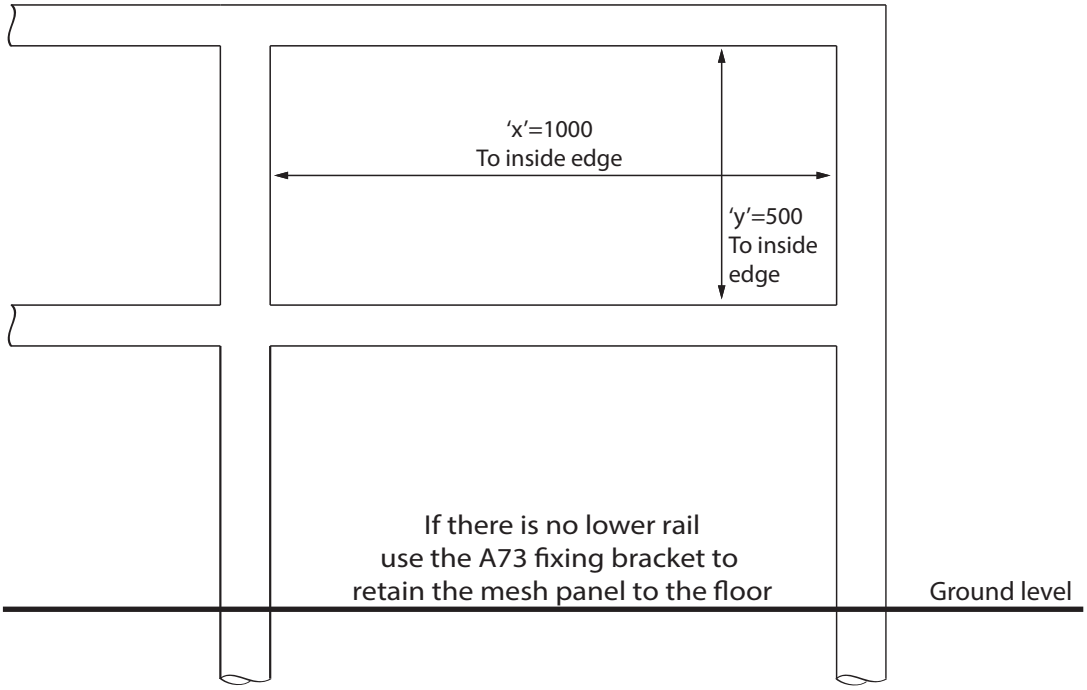

'x'= 1000mm (As an example)
Less 42mm twice = 916mm - Manufactured size

'y'= 500mm (As an example)
Less 42mm twice = 416mm - Manufactured size

DEDUCT THE FOLLOWING FIGURES FROM EACH SIDE OF THE APERTURE
TO OBTAIN THE MANUFACTURED SIZE OF YOUR MESH PANEL/S

TUBULAR FRAME INSIDE EDGE MEASUREMENTS (EXAMPLE 1 AS ABOVE)

TUBE SIZE OF FRAMEWORK - SIZE 5 (26.9MM DIA)	DEDUCT 37MM FROM EACH SIDE OF APERTURE
TUBE SIZE OF FRAMEWORK - SIZE 6 (33.7MM DIA)	DEDUCT 40MM FROM EACH SIDE OF APERTURE
TUBE SIZE OF FRAMEWORK - SIZE 7 (42.4MM DIA)	DEDUCT 42MM FROM EACH SIDE OF APERTURE
TUBE SIZE OF FRAMEWORK - SIZE 8 (48.3MM DIA)	DEDUCT 42MM FROM EACH SIDE OF APERTURE
TUBE SIZE OF FRAMEWORK - SIZE 9 (60.3MM DIA)	DEDUCT 40MM FROM EACH SIDE OF APERTURE

Example 2

Example using size 8 (48.3mm dia tube) centreline dimensions

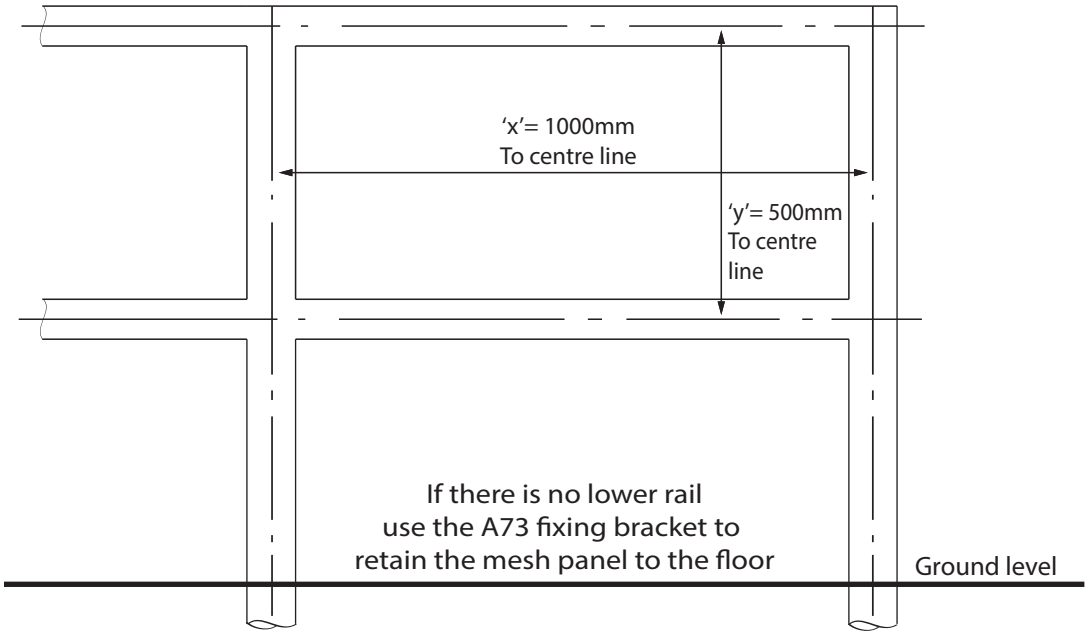

'x'= 1000mm (As an example)
Less 66mm twice = 868mm - Manufactured size

'y'= 500mm (As an example)
Less 66mm twice = 368mm - Manufactured size

DEDUCT THE FOLLOWING FIGURES FROM EACH SIDE OF THE APERTURE
TO OBTAIN THE MANUFACTURED SIZE OF MESH PANEL/S

TUBULAR FRAME CENTRE LINE MEASUREMENTS (EXAMPLE 2 AS ABOVE)

TUBE SIZE OF FRAMEWORK - SIZE 5 (26.9MM DIA)	DEDUCT 51MM FROM EACH SIDE OF APERTURE
TUBE SIZE OF FRAMEWORK - SIZE 6 (33.7MM DIA)	DEDUCT 57MM FROM EACH SIDE OF APERTURE
TUBE SIZE OF FRAMEWORK - SIZE 7 (42.4MM DIA)	DEDUCT 63MM FROM EACH SIDE OF APERTURE
TUBE SIZE OF FRAMEWORK - SIZE 8 (48.3MM DIA)	DEDUCT 66MM FROM EACH SIDE OF APERTURE
TUBE SIZE OF FRAMEWORK - SIZE 9 (60.3MM DIA)	DEDUCT 70MM FROM EACH SIDE OF APERTURE

Example 3

Example using size 6 (33.7mm dia tube) inside edge dimensions

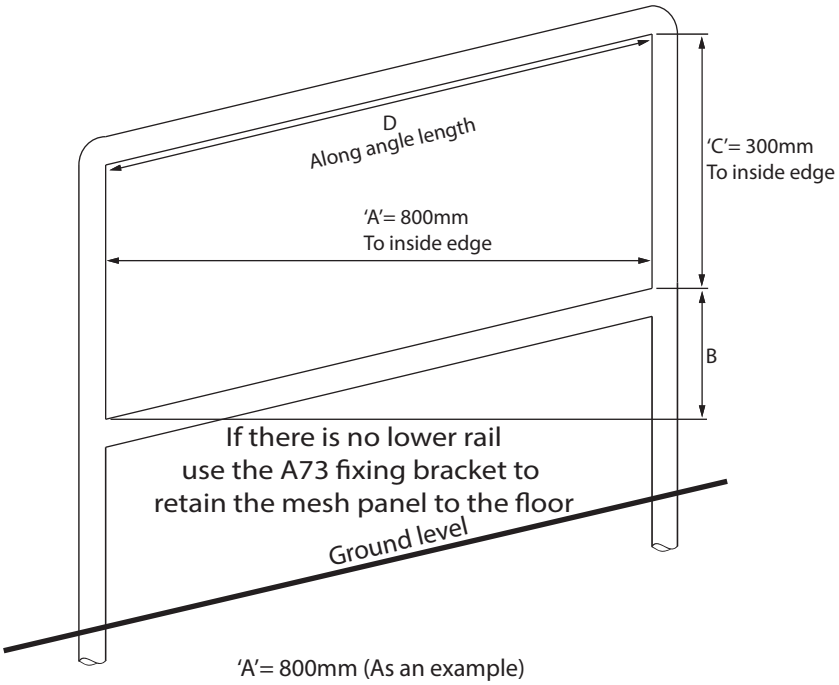

'A'= 800mm (As an example)
Less 40mm twice = 720mm - Manufactured size
'C'= 300mm (As an example)
Less 40mm twice = 220mm - Manufactured size

Note, use dimension A for the horizontal measurement
Note, use dimension C for the vertical measurement

DEDUCT THE FOLLOWING FIGURES FROM EACH SIDE OF THE APERTURE
TO OBTAIN THE MANUFACTURED SIZE OF YOUR MESH PANEL/S

TUBULAR FRAME INSIDE EDGE MEASUREMENTS (EXAMPLE 3 AS ABOVE)

TUBE SIZE OF FRAMEWORK - SIZE 5 (26.9MM DIA)	DEDUCT 37MM FROM EACH SIDE OF APERTURE
TUBE SIZE OF FRAMEWORK - SIZE 6 (33.7MM DIA)	DEDUCT 40MM FROM EACH SIDE OF APERTURE
TUBE SIZE OF FRAMEWORK - SIZE 7 (42.4MM DIA)	DEDUCT 42MM FROM EACH SIDE OF APERTURE
TUBE SIZE OF FRAMEWORK - SIZE 8 (48.3MM DIA)	DEDUCT 42MM FROM EACH SIDE OF APERTURE
TUBE SIZE OF FRAMEWORK - SIZE 9 (60.3MM DIA)	DEDUCT 40MM FROM EACH SIDE OF APERTURE

Example 4

Example using size 6 (33.7mm dia tube) centreline dimensions

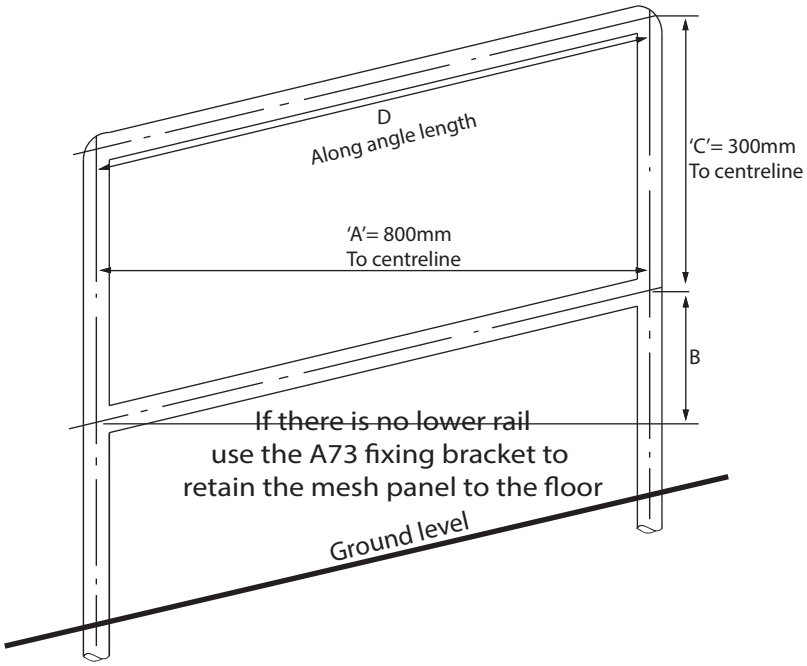

'A= 800mm (As an example)
Less 57mm twice = 686mm - Manufactured size
'C'= 300mm (As an example)
Less 57mm twice = 186mm - Manufactured size

Note, use dimension A for the horizontal measurement
Note, use dimension C for the vertical measurement

DEDUCT THE FOLLOWING FIGURES FROM EACH SIDE OF THE APERTURE
TO OBTAIN THE MANUFACTURED SIZE OF YOUR MESH PANEL/S

TUBULAR FRAME CENTRE LINE MEASUREMENTS (EXAMPLE 4 AS ABOVE)

TUBE SIZE OF FRAMEWORK - SIZE 5 (26.9MM DIA)	DEDUCT 51MM FROM EACH SIDE OF APERTURE
TUBE SIZE OF FRAMEWORK - SIZE 6 (33.7MM DIA)	DEDUCT 57MM FROM EACH SIDE OF APERTURE
TUBE SIZE OF FRAMEWORK - SIZE 7 (42.4MM DIA)	DEDUCT 63MM FROM EACH SIDE OF APERTURE
TUBE SIZE OF FRAMEWORK - SIZE 8 (48.3MM DIA)	DEDUCT 66MM FROM EACH SIDE OF APERTURE
TUBE SIZE OF FRAMEWORK - SIZE 9 (60.3MM DIA)	DEDUCT 70MM FROM EACH SIDE OF APERTURE

A70

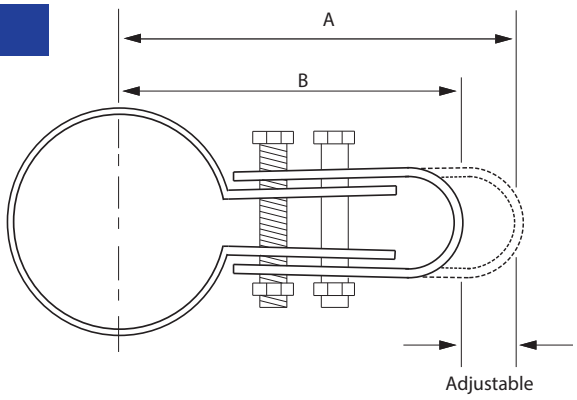

All measurements in mm

Tube Size	A	B
26.9mm	68	58
33.7mm	71	61
42.4mm	75	65
48.3mm	78	68
60.3mm	76	66

Used to connect the mesh panels to the tubular frame.
Spaced at no more than 350mm they provide a strong robust installation.

A72

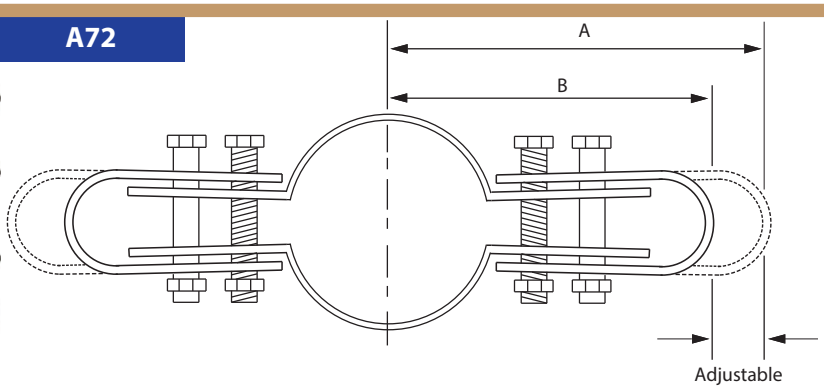

All measurements in mm

Tube Size	A	B
26.9mm	58	48
33.7mm	71	61
42.4mm	75	65
48.3mm	78	68
60.3mm	76	66

Used to connect the mesh panels either side of the tubular frame.
Spaced at no more than 350mm they provide a strong robust installation.

A73

A	B	C	D	E	F
40	84	116	54	12	48

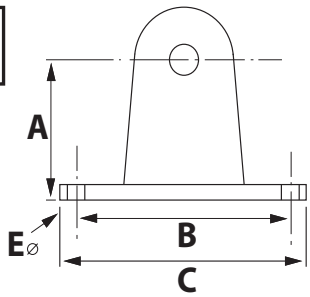

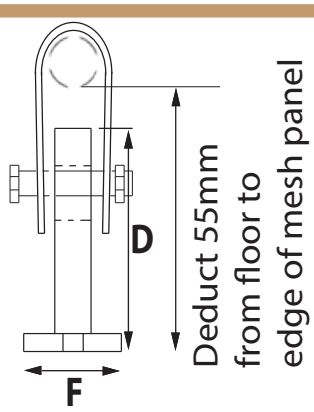

This floor fixing bracket allows the mesh panel to be installed without the need of a lower horizontal rail. Supplied complete with the mesh attachment clip and connection bolt.(Fixing down bolts are not included).
Spaced at no more than 350mm they provide a strong robust installation.

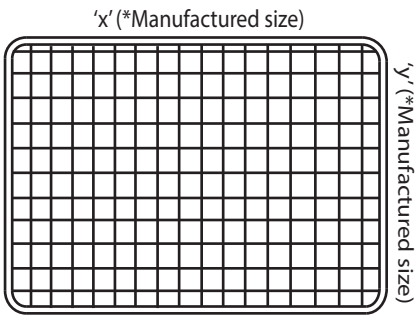

Quantity	'x' (mm)	'y' (mm)

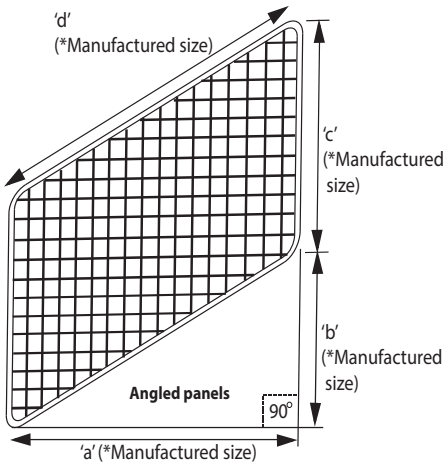

Quantity	'a' (mm)	'b' (mm)	'c' (mm)	'd' (mm)	**Mesh near side or far side (Please tick)	
					Near side	Far side

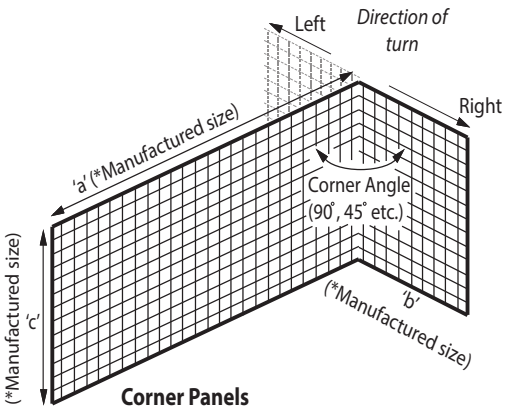

Quantity	'a' (mm)	'b' (mm)	'c' (mm)	Corner angle	Direction of turn (Please tick)		**Mesh near side or far side (Please tick)	
					Left	Right	Near side	Far side

* See previous pages on how to obtain mesh panel manufactured size.
& for 'near side' and 'far side' explanation.
Please print/copy extra sheets if required.

Date

Company Name

Contact Name

E-mail

Tel

How many copies of this page are you sending

Please complete the above, Scan & E Mail to sales@lockinex.com

'U' Shaped panels

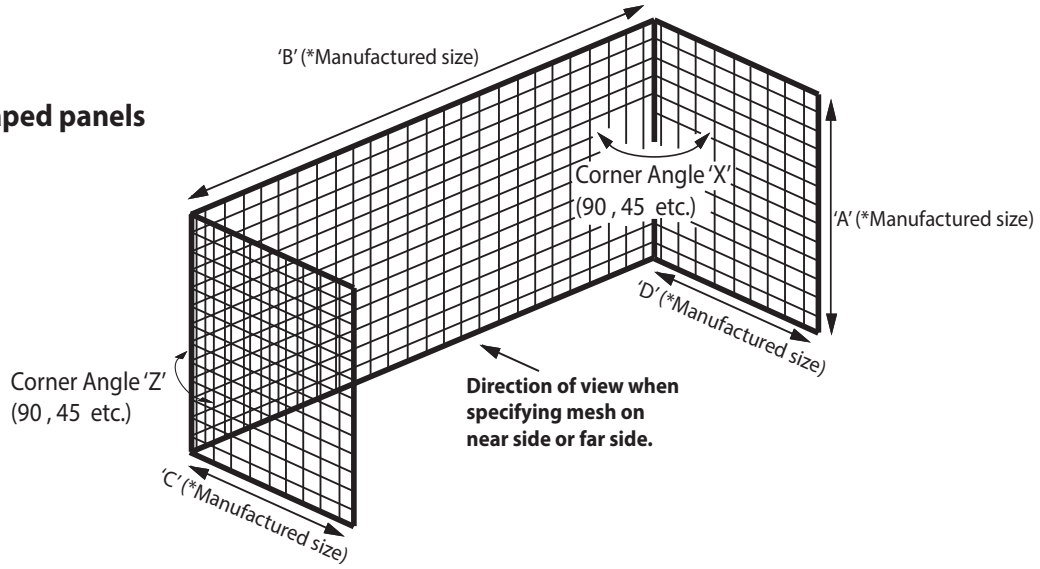

Quantity	'A' (mm)	'B' (mm)	'C' (mm)	'D' (mm)	Corner angle 'X'	Corner angle 'Z'	**Mesh near side or far side (viewed from within the 'U' shape). (Please tick)	
							Near side	Far side

* See previous pages on how to obtain mesh panel manufactured size.
& for 'near side' and 'far side' explanation.
Please print/copy extra sheets if required.

Date

Company Name

Contact Name

E-mail

Tel

How many copies of this page are you sending

Please complete the above, Scan & E Mail to sales@lockinex.com

Mesh panel clip type 1
(Product code A70)

Spaced at no more than 350mm apart, they provide a strong robust installation.

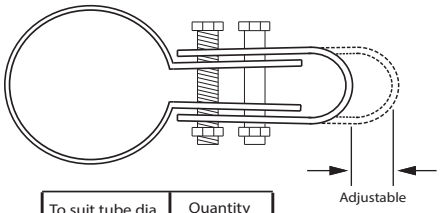

To suit tube dia.	Quantity
26.9mm (Size 5)	
33.7mm (Size 6)	
42.4mm (Size 7)	
48.3mm (Size 8)	
60.3mm (Size 9)	

Mesh panel clip type 2
(Product code A72)

Spaced at no more than 350mm apart, they provide a strong robust installation.

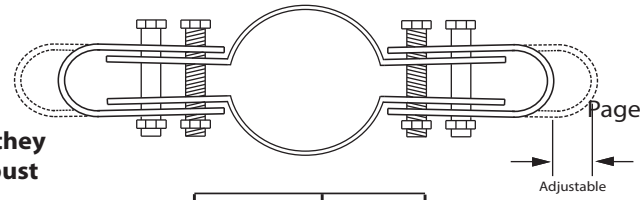

Page 3 of 4 (Gripatex)

To suit tube dia.	Quantity
26.9mm (Size 5)	
33.7mm (Size 6)	
42.4mm (Size 7)	
48.3mm (Size 8)	
60.3mm (Size 9)	

All measurements in mm

Mesh panel floor bracket
(Product code A73)

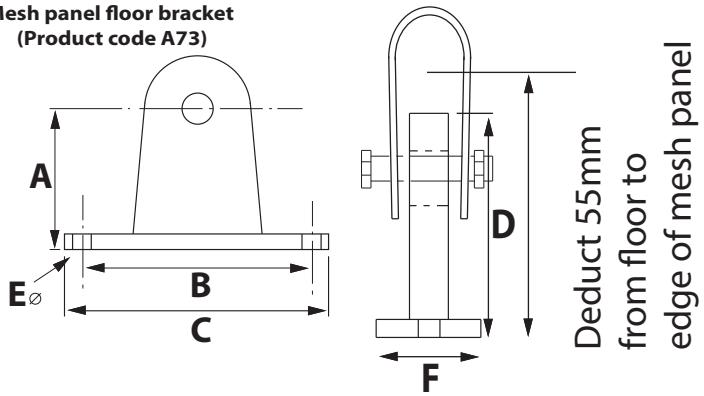

Quantity

		Date
Company Name		
Contact Name		
E-mail		
Tel		
How many copies of this page are you sending		

Please complete the above, Scan & E Mail to sales@lockinex.com

Lockinex (UK) Ltd. Lockinex Works, Eastbourne, Hammonds Drive, East Sussex BN23 6PW
Tel: 01323 737 626 Email: Sales@lockinex.com Web: www.lockinex.com